REVISIONS		
ISS	ZONE	DESCRIPTION\PER REQUEST\DATE

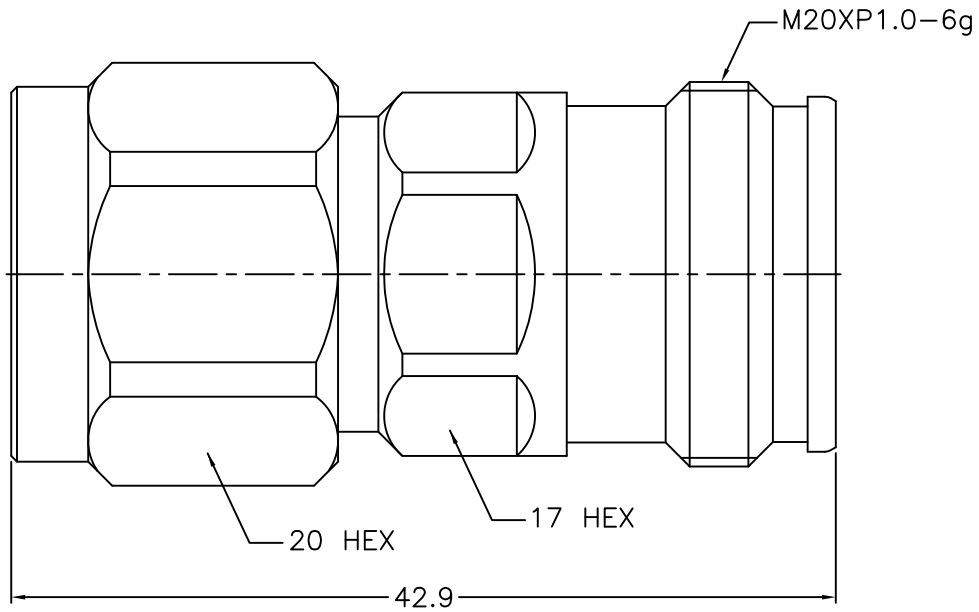

NOTES: FINISH (PLATING THICKNESS IN MICRO–INCHES)
1. BRASS
2. ALBALOY PLATING (COPPER–TIN–ZINC) PL. 80 MIN. THICK
3. BERYLLIUM COPPER
4. SILVER PL. 200 MIN. THICK OVER COPPER PL. 50 MIN. THICK
5. PHOSPHOR BRONZE
6. PTFE

RoHS COMPLIANT

NO.	DESCRIPTION	MATERIAL	FINISH	Q'TY	DRAWING NO.
7	SHELL	NOTE 1	NOTE 2		
6	RETAINER RING	NOTE 5	NOTE 2		
5	GASKET	SILICONE	RED		
4	OUTER CONTACT	NOTE 5	NOTE 4		
3	BODY	NOTE 1	NOTE 2		
2	INSULATOR	NOTE 6	NATURAL		
1	CONTACT PIN	NOTE 3	NOTE 4		

DIMENSIONS ARE IN MILLIMETERS

UNLESS OTHERWISE SPECIFIED TOLERANCES
0.5–6 = ±0.2
6–30 = ±0.4
30–120 = ±0.6
120–315 = ±1
315–1000 = ±1.6
1000–2000 = ±2.4

SCALE 2.5/1 | ISSUE A

PART NO.

APPROVED DATE 10–23–'20

CHECKED DATE 10–23–'20

DRAWN DATE 10–23–'20

G.L.I.

TITLE
N PLUG TO 4.3/10 JACK ADAPTOR

DRAWING NO.
100–NM–4310F–50

FILE NO. R:\D\DWG\100\NM\4340F\50–A