REVISIONS		
ISS	ZONE	DESCRIPTION\PER REQUEST\DATE
C	D-5	NO.1'S DESIGN WAS CHANGED\RD-DM031212001 \12-12-'14
D	D-7	NO.3'S DESIGN WAS CHANGED\RD-DM060614001 \06-14-'17
E	A-2	NO.5 WAS CHANGED\RD-DM090120001\02-06-'20

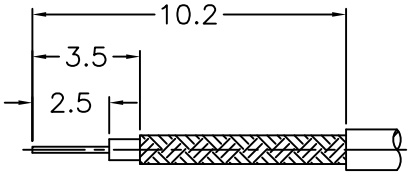

RECOMMENDED
CABLE STRIPPING DIM'S
(建議剝線尺寸)

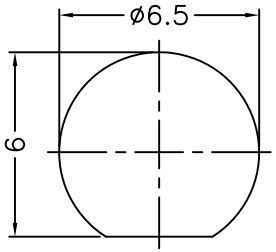

RECOMMENDED
MOUNTING HOLE
(建議架設孔)

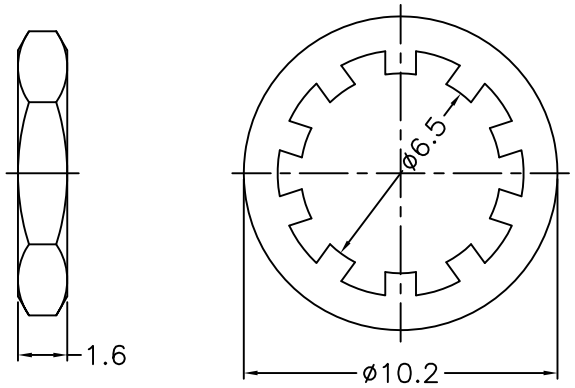

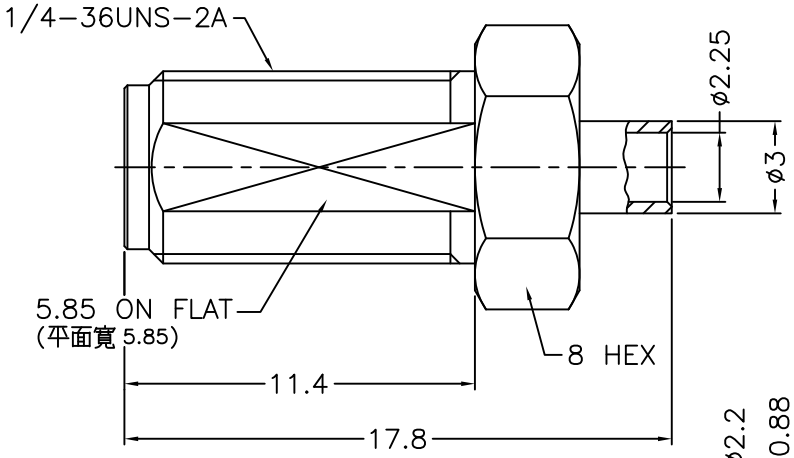

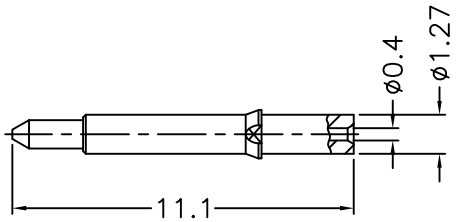

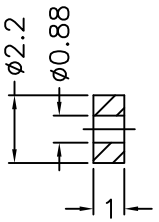

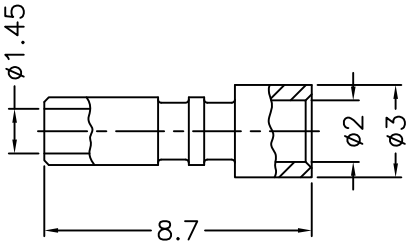

1. CRIMPED FERRULE
   HEX CRIMP SIZE .1"
2. CONTACT PIN TO SOLDER
3. MAX. PANEL THICKNESS=3.2mm

NOTES: FINISH (PLATING THICKNESS IN MICRO-INCHES)
1. BRASS
2. THIN GOLD OVER NICKEL PL. 50 MIN. THICK OVER COPPER PL. 50 MIN. THICK
3. GOLD PL. 3 MIN. THICK OVER NICKEL PL. 50 MIN. THICK OVER COPPER PL. 50 MIN. THICK
4. PTFE

RoHS COMPLIANT

NO.	DESCRIPTION	MATERIAL	FINISH	Q'TY	DRAWING NO.
7	HEX NUT	NOTE 1	NOTE 2		
6	LOCK WASHER	NOTE 1	NOTE 2		
5	FERRULE	NOTE 1	NOTE 2		
4	INSULATOR	NOTE 4	NATURAL		
3	CONTACT PIN	NOTE 1	NOTE 3		
2	INSULATOR	NOTE 4	NATURAL		
1	BODY	NOTE 1	NOTE 2		

DIMENSIONS ARE IN MILLIMETERS

UNLESS OTHERWISE SPECIFIED TOLERANCES
0.5-6 = ±0.2
6-30 = ±0.4
30-120 = ±0.6
120-315 = ±1
315-1000 = ±1.6
1000-2000 = ±2.4

SCALE	4/1	ISSUE	E

PART NO.

APPROVED	DATE 02-06-'20
CHECKED	DATE 02-06-'20
DRAWN	DATE 02-06-'20

G.L.I.

TITLE
SMA REVERSE POLARITY BULKHEAD JACK (FOR RG-178, 196 CABLE)

DRAWING NO.
1436RP-6411U2-01-50

FILE NO. R:\D\DWG\1436\RP\6411U2\01\50-E