REVISIONS		
ISS	ZONE	DESCRIPTION\PER REQUEST\DATE

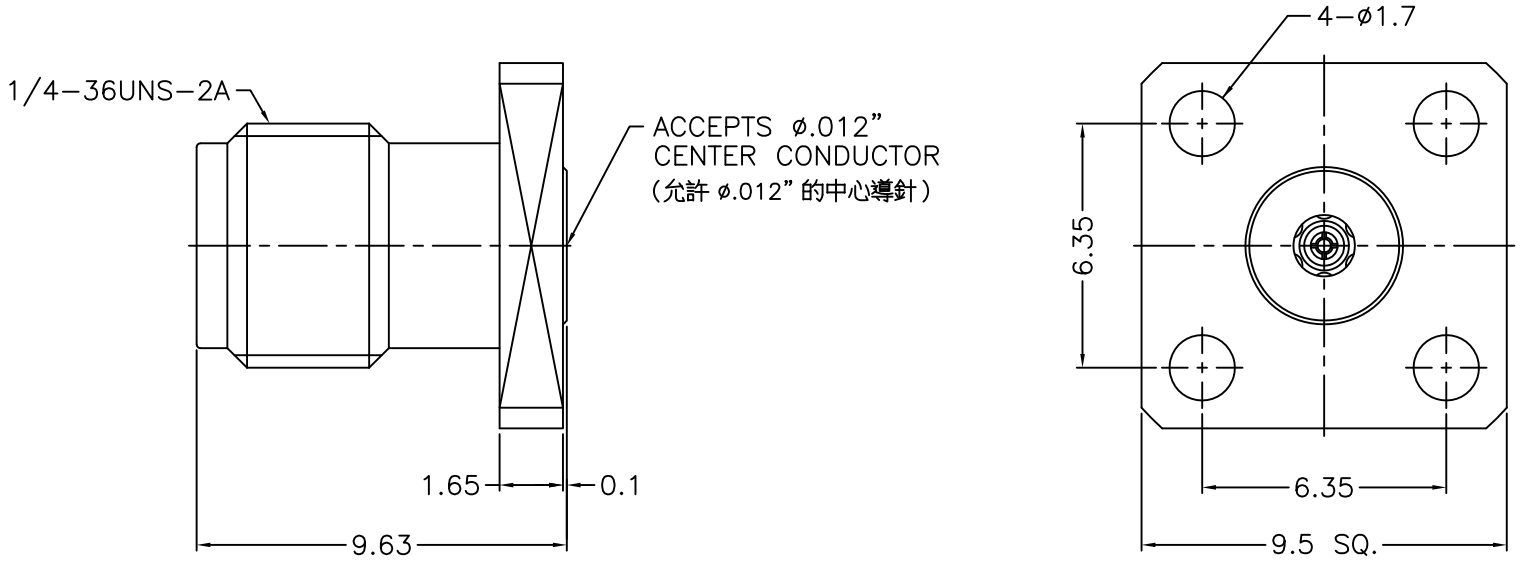

NOTES: FINISH (PLATING THICKNESS IN MICRO–INCHES)
1. STAINLESS STEEL
2. PASSIVATED
3. BERYLLIUM COPPER
4. GOLD PL. 5 MIN. THICK OVER NICKEL PL. 50 MIN. THICK OVER COPPER PL. 50 MIN. THICK
5. GOLD PL. 10 MIN. THICK OVER NICKEL PL. 50 MIN. THICK OVER COPPER PL. 50 MIN. THICK
6. ULTEM 1000

RoHS COMPLIANT

NO.	DESCRIPTION	MATERIAL	FINISH	Q'TY	DRAWING NO.
4	RING	NOTE 1	NOTE 4		
3	CONTACT PIN	NOTE 3	NOTE 5		
2	INSULATOR	NOTE 6	NATURAL		
1	BODY	NOTE 1	NOTE 2		

DIMENSIONS ARE IN MILLIMETERS

UNLESS OTHERWISE SPECIFIED TOLERANCES
0.5–6 = ±0.2
6–30 = ±0.4
30–120 = ±0.6
120–315 = ±1
315–1000 = ±1.6
1000–2000 = ±2.4

SCALE 5/1 ISSUE 1

PART NO.

APPROVED DATE 08–06–'19

CHECKED DATE 08–06–'19

DRAWN ALAN DATE 08–06–'19

G.L.I.

TITLE 2.92mm PANEL RECEPT. JACK

DRAWING NO. 292–6551K5–.012–50

FILE NO. R:\D\G\DWG\292\6551K5\012\50