REVISIONS		
ISS	ZONE	DESCRIPTION\PER REQUEST\DATE
B	D-2	DESIGN WAS CHANGED\RD-DM020510001\05-10-'13
C	E-2	PROCESS WAS CHANGED\RD-DM050520001\05-20-'16
D	B-2	NO.9 WAS CHANGED\RD-DM070921002\09-21-'18

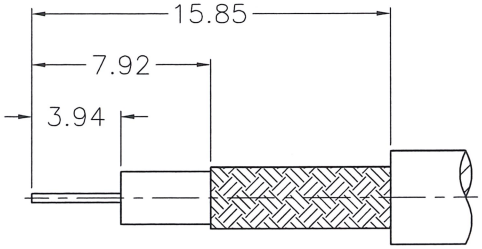

RECOMMENDED
CABLE STRIPPING DIM'S
(建議剝線尺寸)

NOTE: 1. IMPEDANCE: 75 OHM
2. FREQUENCY RANGE: DC – 3 GHz
3. VSWR: 1.1 Max.
4. DIELECTRIC WITHSTANDING VOLTAGE: 1500 VRMS MIN.

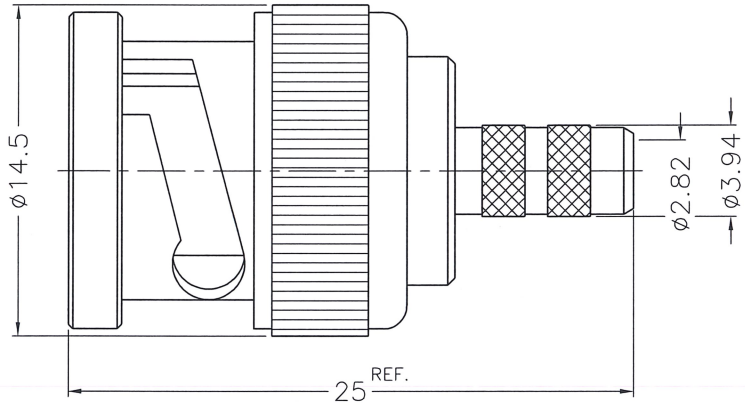

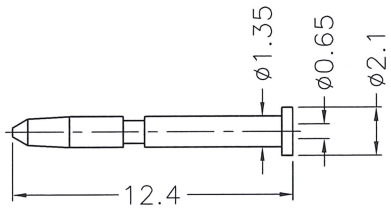

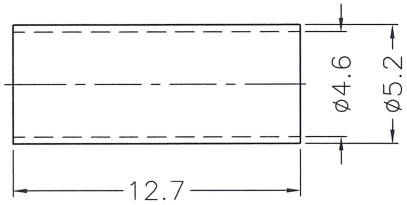

1. CRIMPED FERRULE
HEX CRIMP SIZE .178"
2. CRIMPED CONTACT PIN
HEX CRIMP SIZE .041" OR .042"

NO.	DESCRIPTION	MATERIAL	FINISH	Q'TY	DRAWING NO.
10	FERRULE	NOTE 1	NOTE 2	1	FR-46-52-127
9	CONTACT PIN	NOTE 1	NOTE 4	1	900-1121A11-9-0.65
8	RING	NOTE 1	NOTE 2	1	900-1121A11-8
7	WASHER	NOTE 1	NOTE 2	1	WS-90-128-08
6	SPRING	SK5	NOTE 2	1	900-1000-6
5	GASKET	SILICONE	RED	1	GS-80-115-15-S
4	OUTER CONTACT	NOTE 3	NOTE 2	1	900-1121A11-4
3	INSULATOR	NOTE 5	NATURAL	1	900-1121A11-3-75T
2	BODY	NOTE 1	NOTE 2	1	900-1121A11-2-26
1	SHELL	NOTE 1	NOTE 2	1	900-1121A11-1

NOTES: FINISH (PLATING THICKNESS IN MICRO-INCHES)
1. BRASS
2. NICKEL PL. 100 MIN. THICK OVER COPPER PL. 50 MIN. THICK
3. BERYLLIUM COPPER
4. GOLD PL. 3 MIN. THICK OVER NICKEL PL. 50 MIN. THICK OVER COPPER PL. 50 MIN. THICK
5. TEFLON

出圖 2023.8.02 設計部

Amphenol Connex

RoHS COMPLIANT

DIMENSIONS ARE IN MILLIMETERS

UNLESS OTHERWISE SPECIFIED TOLERANCES
0.5-6 = ±0.2
6-30 = ±0.4
30-120 = ±0.6
120-315 = ±1
315-1000 = ±1.6
1000-2000 = ±2.4

SCALE 3/1 | ISSUE D

PART NO. 112955-11

APPROVED Alan.W DATE 09-21-'18
CHECKED Alan.W DATE 09-21-'18
DRAWN Alan.W DATE 09-21-'18

G.L.I.

TITLE
BNC CRIMP PLUG
(BELDEN 8218/VFM 809/1407B/1167B)

DRAWING NO. 900-1121A11-26-75

FILE NO. R:\D\G\DWG\900\1121A11\26\75-D