REVISIONS		
ISS	ZONE	DESCRIPTION\PER REQUEST\DATE

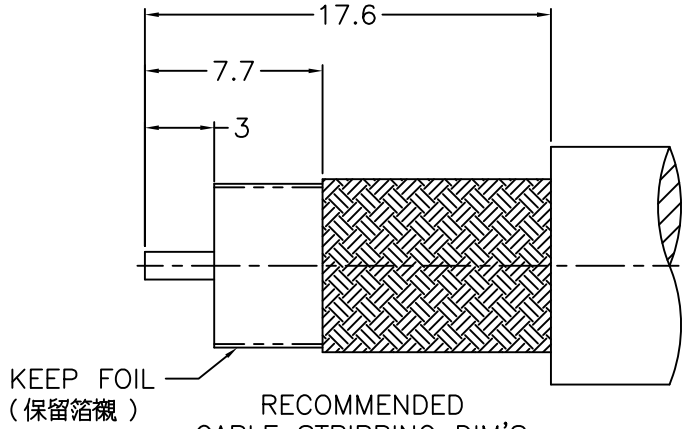

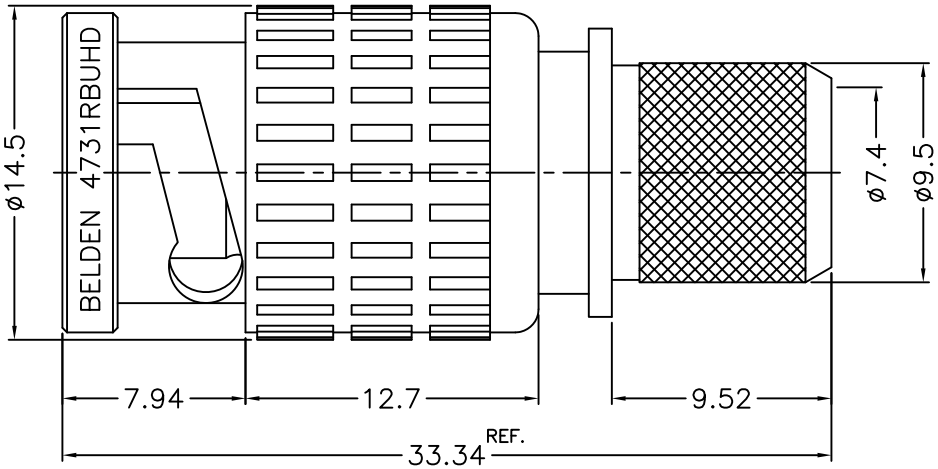

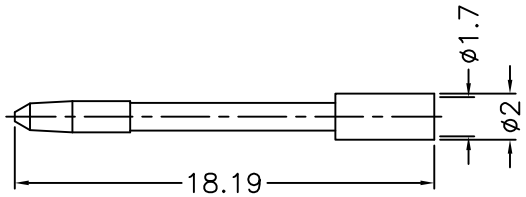

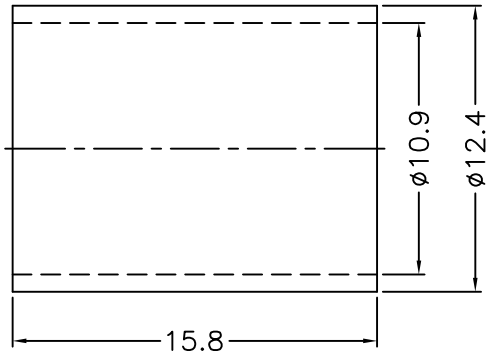

NOTES: FINISH (PLATING THICKNESS IN MICRO-INCHES)
1. BRASS
2. NICKEL PL. 100 MIN. OVER COPPER PL. 50 MIN.
3. GOLD PL. 50 MIN. OVER NICKEL PL. 50 MIN. OVER COPPER PL. 50 MIN.
4. TEFLON

RoHS COMPLIANT

1. CRIMPED FERRULE HEX CRIMP SIZE .429"
2. CRIMPED CONTACT PIN HEX CRIMP SIZE .068"

NO.	DESCRIPTION	MATERIAL	FINISH	Q'TY	DRAWING NO.
9	FERRULE	NOTE 1	NOTE 2	1	FR-109-124-158
8	CONTACT PIN	NOTE 1	NOTE 3	1	900-1121D9-8 -1.7
7	WASHER	NOTE 1	NOTE 2	1	WS-90-128-08
6	SPRING	SK5	NOTE 2	1	900-1000-6
5	RETAINER RING	NOTE 1	NOTE 2	2	900-1000-5
4	GASKET	RUBBER	RED	1	GS-80-115-15
3	INSULATOR	NOTE 4	NATURAL	1	900-1121D9-3 -75T
2	BODY	NOTE 1	NOTE 2	1	900-1121D10-2 -20
1	SHELL	NOTE 1	NOTE 2	1	900-1121D9-1

DIMENSIONS ARE IN MILLIMETERS

UNLESS OTHERWISE SPECIFIED TOLERANCES
0.5-6 = ±0.2
6-30 = ±0.4
30-120 = ±0.6
120-315 = ±1
315-1000 = ±1.6
1000-2000 = ±2.4

SCALE 3/1 | ISSUE A

PART NO.

APPROVED DATE 06-06-'18

CHECKED DATE 06-06-'18

DRAWN DATE 06-06-'18

G.L.I.

TITLE
BNC CRIMP PLUG
(FOR BELDEN 4731R)

DRAWING NO.
900-1121D10-20-75

FILE NO. R:\D\G\DWG\900\1121D10\20\75