REVISIONS		
ISS	ZONE	DESCRIPTION\PER REQUEST\DATE

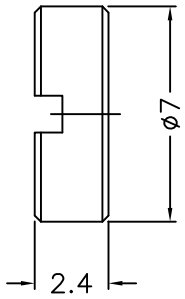

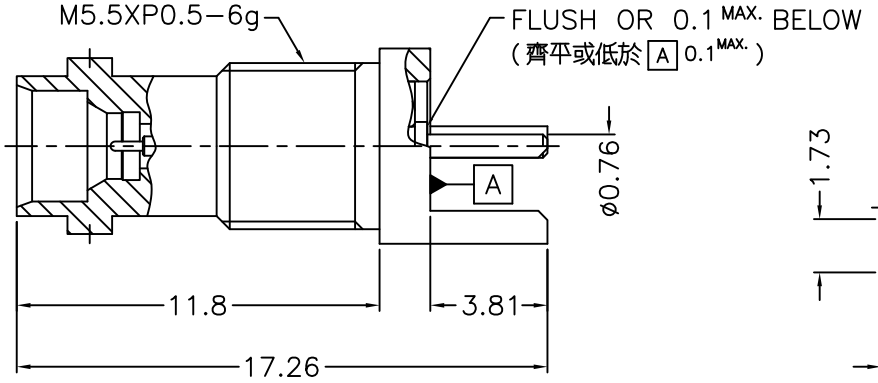

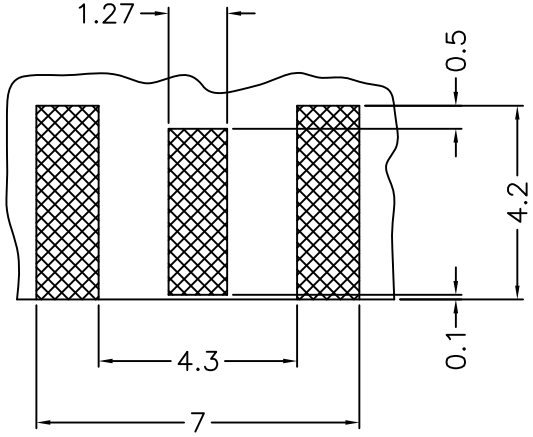

PCB LAYOUT

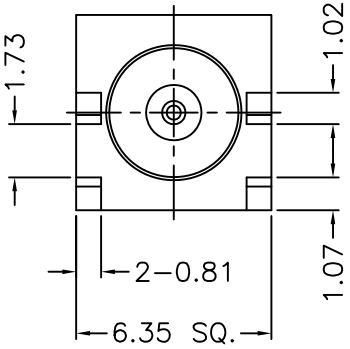

NOTES: FINISH (PLATING THICKNESS IN MICRO–INCHES)
1. BRASS
2. NICKEL PL. 100 MIN. THICK OVER COPPER PL. 50 MIN. THICK
3. GOLD PL. 3 MIN. THICK OVER NICKEL PL. 50 MIN. THICK OVER COPPER PL. 50 MIN. THICK
4. PTFE

RoHS COMPLIANT

NO.	DESCRIPTION	MATERIAL	FINISH	Q'TY	DRAWING NO.
4	NUT	NOTE 1	NOTE 2	1	NUT–5505–24–A
3	CONTACT PIN	NOTE 1	NOTE 3	1	SMPM–1181S1–3
2	INSULATOR	NOTE 4	NATURAL	1	SMPM–1181S1–2 –50T
1	BODY	NOTE 1	NOTE 3	1	SMPM–1181S2–1

DIMENSIONS ARE IN MILLIMETERS

UNLESS OTHERWISE SPECIFIED TOLERANCES
0.5–6 = ±0.2
6–30 = ±0.4
30–120 = ±0.6
120–315 = ±1
315–1000 = ±1.6
1000–2000 = ±2.4

SCALE 4/1 ISSUE 1

PART NO.

APPROVED DATE 05–10–'19

CHECKED DATE 05–10–'19

DRAWN BRIAN DATE 05–10–'19

G.L.I.

TITLE
MINI SMP END LAUNCH MOUNT JACK

DRAWING NO.
SMPM–1181S2–A1–50

FILE NO. R:\D\G\DWG\SMPM\1181S2\A1\50