REVISIONS		
ISS	ZONE	DESCRIPTION\PER REQUEST\DATE

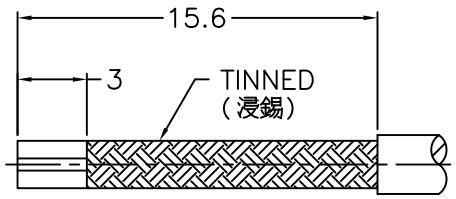

RECOMMENDED
CABLE STRIPPING DIM'S
(建議剝線尺寸)

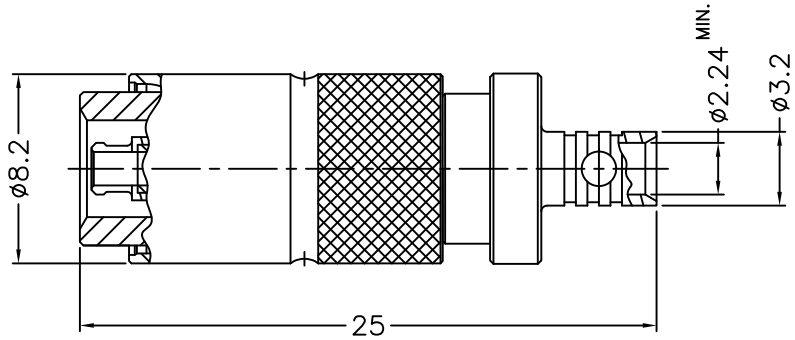

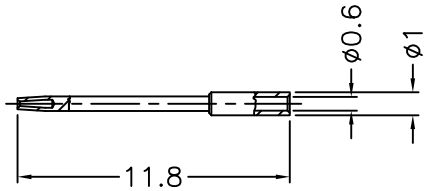

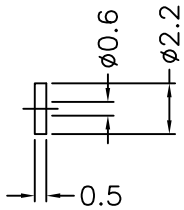

NO.	DESCRIPTION	MATERIAL	FINISH	Q'TY	DRAWING NO.
10	CONTACT PIN	NOTE 3	NOTE 4		
9	BARREL	NOTE 1	NOTE 4		
8	RING	NOTE 1	NOTE 2		
7	OUTER BODY	NOTE 1	NOTE 2		
6	SPRING	STAINLESS STEEL	NATURAL		
5	BALL	STAINLESS STEEL	NATURAL		
4	OUT CONTACT	NOTE 3	NOTE 4		
3	INSULATOR	NOTE 5	NATURAL		
2	INSULATOR	NOTE 5	NATURAL		
1	BODY	NOTE 1	NOTE 2		

NOTES: FINISH (PLATING THICKNESS IN MICRO-INCHES)
1. BRASS
2. NICKEL PL. 100 MIN. THICK OVER COPPER PL. 50 MIN. THICK
3. BERYLLIUM COPPER
4. GOLD PL. 3 MIN. THICK OVER NICKEL PL. 50 MIN. THICK OVER COPPER PL. 50 MIN. THICK
5. PTFE

RoHS COMPLIANT

DIMENSIONS ARE IN MILLIMETERS

UNLESS OTHERWISE SPECIFIED TOLERANCES
0.5–6 = ±0.2
6–30 = ±0.4
30–120 = ±0.6
120–315 = ±1
315–1000 = ±1.6
1000–2000 = ±2.4

SCALE 3/1 | ISSUE 2

PART NO.

APPROVED | DATE 06-28-'19

CHECKED | DATE 06-28-'19

DRAWN BRIAN | DATE 06-28-'19

G.L.I.

TITLE
MINI SMP DIRECT SOLDER PLUG

DRAWING NO.
SMPM-6181S1-A1-50

FILE NO. R:\D\G\DWG\SMPM\6181S1\A1\50